PLATON
www.platon-direct.eu

FLOW

LICO

Product Data Sheet **DS1132**

Platon Plastic VA Flowmeter

PLATON PLASTIC TUBE VA METER TYPE GR, GRV

The Platon GR/GRV flowmeters are moulded plastic tube variable area meters with ball floats. The precision moulded tapered tube has guides to stabilise the float, allowing easy flow reading against the clear 50mm long scale. Units are available calibrated for air or water flows.

Typical applications are for operator monitoring of cooling, purging or sample flows. For simple adjustment of flow rates, the GRV option has a built in multi-turn flow control valve. Designed for vertical mounting on a control panel, the flowmeter is supplied with brackets for flush mounting through a cutout approximately 116 x 19mm. Alternatively the meter can be surface mounted.

For immediate indication of process alarm conditions, adjustable transparent indicators can be clipped into the flowmeter face, presenting a red limit line at the required flow rate. These accessories can be used to show the limits of normal flow adjustment, or an alarm level.

Reliable and rugged process connections are made to stainless steel 1/8 NPT female threads built into a stainless backplate within the meter. The polycarbonate body and flow tube is O-ring sealed to the backplate, and can simply be disassembled for any necessary cleaning or interchange of flow scales.

FEATURES

- Low cost flow indication
- Air or water calibration
- Easily readable 50mm scale
- Stainless steel rear connections
- Set point indicator flag
- Flow control valve option

STANDARD FLOW RANGES

Air at ATP (1.013 bar abs & 20°C)		
Standard model	**Valved model**	**Flow range**
GR11	GRV11	30-240 cm^3/min
GR13	GRV13	100-1000 cm^3/min
GR14	GRV14	200-2500 cm^3/min
GR20	GRV20	0.5-5 L/min
GR21	GRV21	1-10 L/min
GR22	GRV22	2-25 L/min
GR25	GRV25	10-100 L/min
Water at 20°C		
Standard model	**Valved model**	**Flow range**
GR32	GRV32	5-50 cm^3/min
GR34	GRV34	20-300 cm^3/min

DIMENSIONS

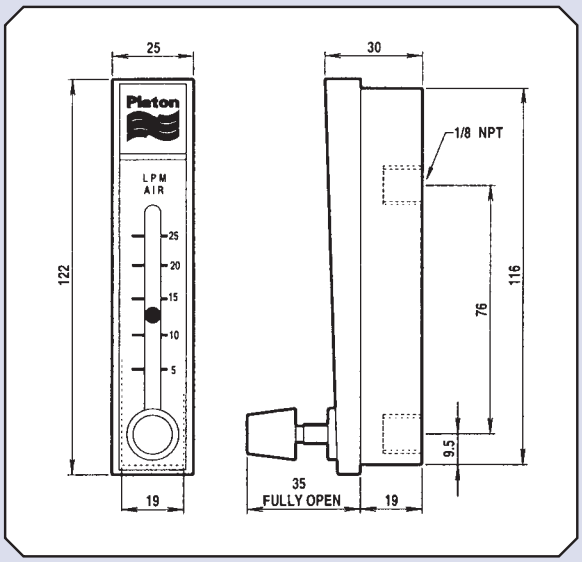

TECHNICAL DATA

Materials:	Polycarbonate flowtube, Stainless steel connections, Neoprene O-ring seals
Float:	Dependent on flow range – (stainless steel/glass/tungsten carbide, monel typical)
Scale Length:	50mm
Accuracy:	±4% FSD
Connections:	1/8" NPT rear facing female
Temperature:	55°C maximum
Pressure:	100psi/7 bar maximum
Mounting Bracket:	For flush panel mounting cutout is 116 x 19mm: two brackets supplied with each meter. Flowmeter can also be surface mounted.
Instructions:	Install tube vertical with flow upwards: read centre line of float against scale.
Models Available:	Standard unit Model GR Valved unit Model GRV (fitted with stainless steel 4 turn flow control valve). Flagmarket Model GRF (polycarbonate marker to clip inside meter scale at flow alarm level).

ALTERNATIVE MODELS

Model GR/GRV flowmeters are designed for simple flow indication on air or water.

For custom scaled flowmeters on alternative fluids, the Platon LG, LGV, LGX and LGXV glass tube meter is available. For higher accuracy flow measurement and a wider flow range, the standard Platon glass tube flowmeters are offered with 100mm scale length.

Contact our Sales Department for more information on any of our products.

Every effort has been made during the preparation of this document to ensure the accuracy of statements and specifications. However, we do not accept liability for damage, injury, loss or expense caused by errors or omissions made. We reserve the right to withdraw or amend products or documentation without notice.

UKAS CALIBRATION 0043

LICO

LICO Electronics GmbH
Klederinger Str. 31
A-2320 Kledering, Austria
office@lico.at www.lico.at
Tel. +43 1 706 43 00

BSI REGISTERED UKAS QUALITY MANAGEMENT
CERTIFICATE No. FM22358

www.mess-regeltechnik.at www.platon-direct.eu